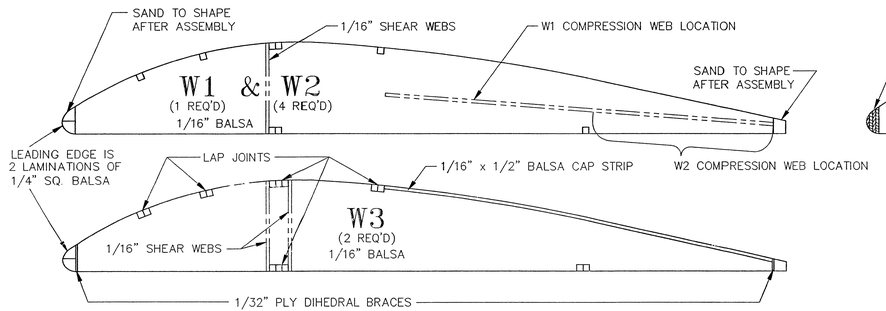

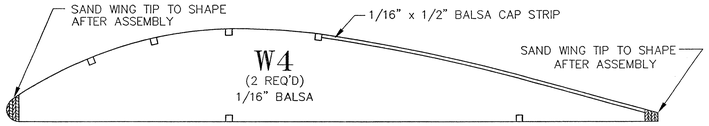

NOTE: TURBULATOR SPARS AND SHEAR WEBS NOT SHOWN IN FRONT VIEW FOR CLARITY.

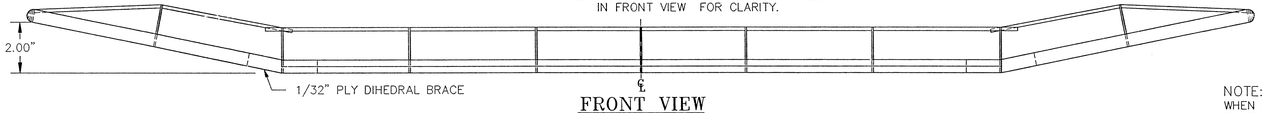

FRONT VIEW

1/2 SCALE

NOTE!

DUE TO CHANGES IN TEMPERATURE AND HUMIDITY, THE PAPER PLANS MAY EXPAND OR CONTRACT SLIGHTLY. THEREFORE, THE PARTS MAY NOT EXACTLY MATCH THE PLANS. THIS WILL NOT AFFECT AIRCRAFT PERFORMANCE. ASSUME THE DIE-CUT PARTS ARE CORRECT AND ADJUST YOUR ASSEMBLY AS REQUIRED.

NOTE:
WHEN COVERING TOP OF OUTER WING PANELS, USE MULTIPLE PIECES OF COVERING (DUE TO COMPOUND CURVES)

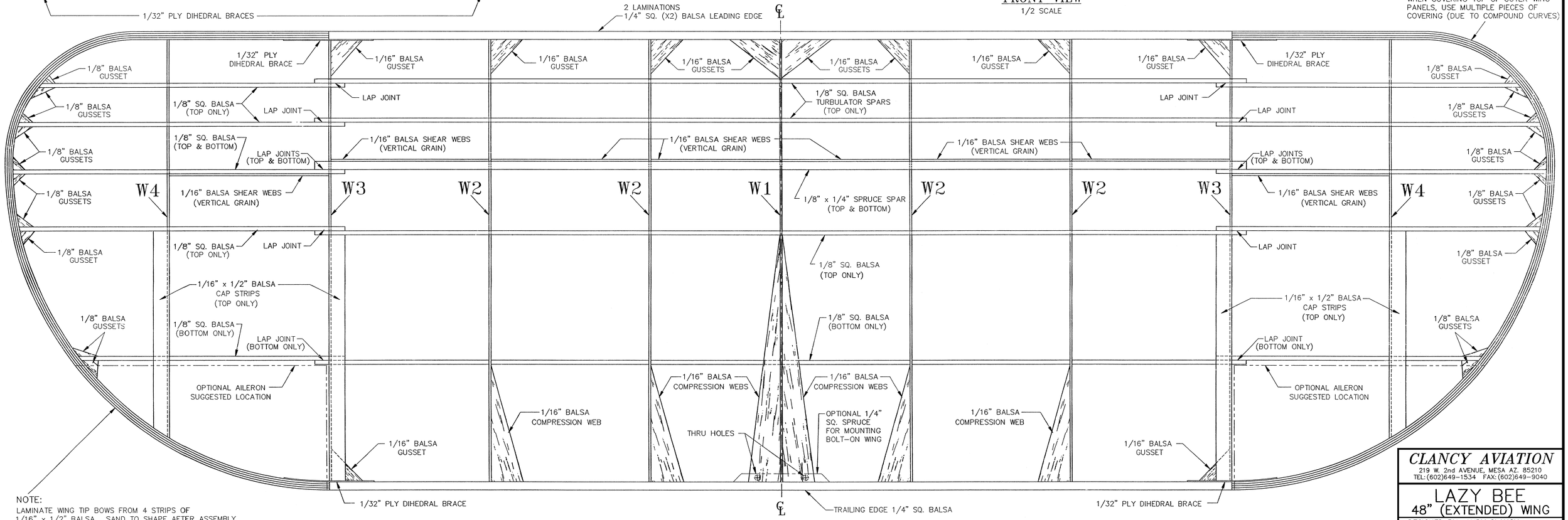

TOP VIEW

NOTE:
LAMINATE WING TIP BOWS FROM 4 STRIPS OF 1/16" x 1/2" BALSA. SAND TO SHAPE AFTER ASSEMBLY. SEE "TO BUILD A BEE" INSTRUCTION BOOK FOR DETAILS.

PRE-LAMINATED WING TIPS ARE NOW AVAILABLE FROM CLANCY AVIATION.

CLANCY AVIATION
219 W. 2nd AVENUE, MESA AZ. 85210
TEL: (602)649-1534 FAX: (602)649-9040

LAZY BEE
48" (EXTENDED) WING

DESIGNED BY: ANDY CLANCY
CAD DRAWING (REV.A) BY: WILLIAM NICHOLS
CAD DRAWING (REV.B) BY: CRAIG HAVILAND
SCALE: FULL | REV: B | SHT: 2L OF 3